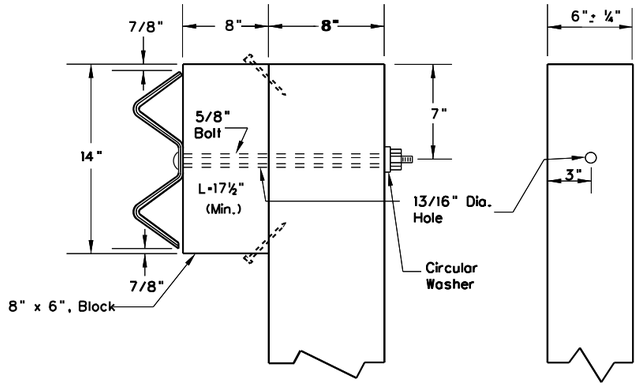

WOOD GUARDRAIL POST (RECTANGULAR)

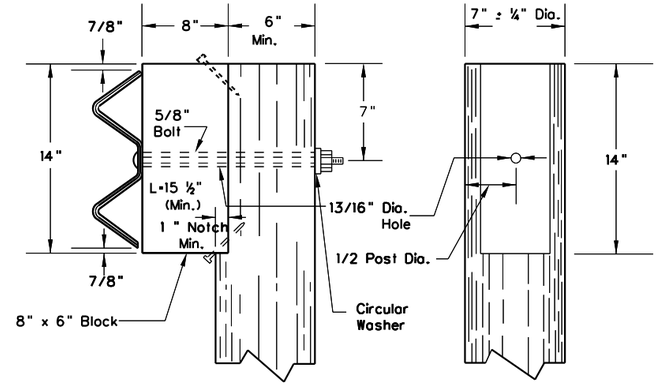

WOOD GUARDRAIL POST (ROUND)

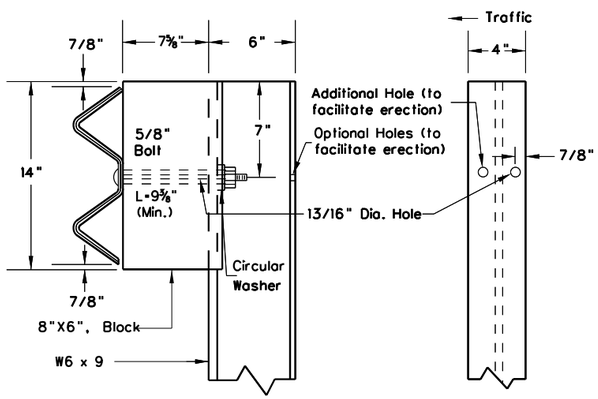

STEEL GUARDRAIL POST
(WOOD BLOCK)

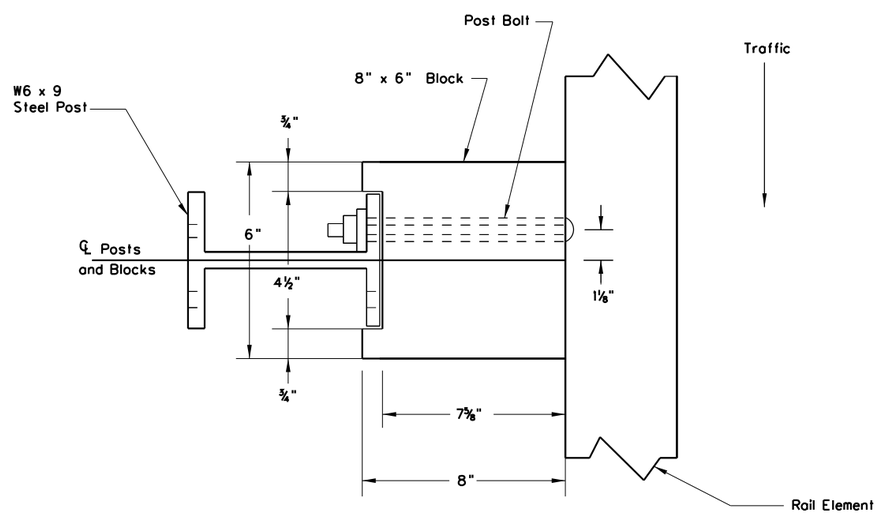

PLAN

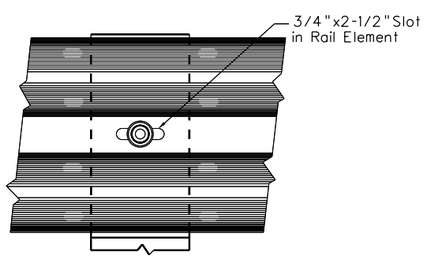

WOOD POST DETAIL

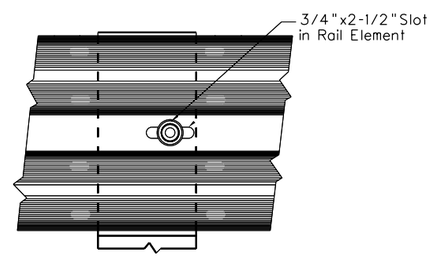

STEEL POST DETAIL

NOTES

GENERAL:

Guardrail systems on NHS routes must meet current NCHRP 350 or the most current AASHTO Manual for Assessing Safety Hardware (MASH) crash testing criteria and have an FHWA eligibility letter to be used on WVDOH projects.

Only FHWA approved guardrail systems utilizing wood or approved alternate block-outs shown on the Division's "Approved Source/Product Listing" shall be used. Steel "W" shapes shall not be used for block-outs. Only one type of block shall be used for block-outs throughout any project, unless otherwise specified.

" Blocks for block-outs" shall be used on all posts except when otherwise noted on plans. When blocks are not provided, the post details will be as shown herein, except the ⅝" bolt minimum length will be reduced as required, the 1" minimum notch for the wood guardrail post (round) will not be used, and nails for block stability will not be needed. For steel posts without blocks, details of the posts shall conform to the "Steel Guardrail Post (Wood Block)" details herein, with the additional holes (to facilitate erection) being optional.
The circular washers shall be made of steel and galvanized in accordance with the requirements of AASHTO M232.

WOOD POSTS:

Posts and blocks shall be the same type of wood.
Wood posts shall be pressure-treated after notching, in accordance with Section 710.5 of the specifications.
The 1" (minimum) notch dimension as shown for round wooden posts shall be located along the vertical centerline for the entire upper 14" of the post and shall apply regardless of whether the post is notched (as shown) or otherwise cut or sawed to form a vertical flat plane and then, at some location below the top 14", is angularly sliced out to the surface of the post.
Post length will be 6'-+ ½" unless otherwise noted.

STEEL POSTS:

Blocks shall be centered on their posts and the center of the block holes, for bolts connecting rails to blocks, shall be horizontally offset 1-1/8" from the center of the steel posts toward the post edge facing approaching traffic for both polimer and wood blocks, as shown for wood blocks on the Plan view of the Block Stop Detail. Post length will be 6'-+ ½" unless otherwise noted.

WOOD BLOCKS:

The type (species) of wood for blocks is to be one of the types (species) permitted by specifications for wood posts. Wood blocks shall be pressure--treated in conformance with the requirements for wood posts. However, creosote oil is not permitted as a preservative in the pressure treatment of wood blocks to be erected on steel posts. 8" x 6" wood blocks shall be positioned so that the 6" x 14" faces of the blocks are the contact faces for the rail elements and the posts in order to achieve the blockout dimension shown. When wood block is used adjacent to a wood post, the block shall be nailed to the post with a galvanized steel 10d common nail. The nail is to be driven into the center of the top or bottom of the block.

WEST VIRGINIA DEPARTMENT OF TRANSPORTATION
DIVISION OF HIGHWAYS
STANDARD DETAIL

REVISED STANDARD DETAIL

PREPARED 7-1-99

REVISION DATE
03-05-2010
06-16-2010
11-13-12

GUARDRAIL POSTS AND BLOCKS

REPLACES SHEET GR2